Nano World Journal

https://doi.org/10.17756/nwj.2023-s5-013

Research Article

Open Access

# Optical Performance of AlGaN/BGaN Deep-ultraviolet LEDs with Staircase Barrier and V-shape Well Structure

**R. Manaswini[1], M. Manikandan[1], C.P. Latha[2], Joseph Anthony Pratap[1], G. Dhivyasri[3], Aruna Dore[1] and M.G. Sumithra[4*]**

*[1]Department of Electronics and Communication Engineering, Presidency University, Bengaluru, Karnataka, India*
*[2]Department of Electronics and Communication Engineering, HMA Institute of Technology, Tumkur, Karnataka, India*
*[3]Department of Computer Science Engineering (DS), Sai Vidya Institute of Technology, Bengaluru, Karnataka, India*
*[4]Department of Electronics and Communication Engineering, Sri Krishna College of Technology, Coimbatore, Tamil Nadu, India*

**[*]Correspondence to:**
M. G. Sumithra
Department of Electronics and Communication Engineering,
Sri Krishna College of Technology,
Coimbatore, Tamil Nadu, India.
**E-mail:** sumithrapalanisamy74@gmail.com

**Received:** October 11, 2023
**Accepted:** December 18, 2023
**Published:** December 21, 2023

**Citation:** Manaswini R, Manikandan M, Latha CP, Pratap JA, Dhivyasri G, et al. 2023. Optical Performance of AlGaN/BGaN Deep-ultraviolet LEDs with Staircase Barrier and V-shape Well Structure. *NanoWorld J* 9(S5): S67-S69.

**Copyright:** © 2023 Manaswini et al. This is an Open Access article distributed under the terms of the Creative Commons Attribution 4.0 International License (CCBY) (http://creativecommons.org/licenses/by/4.0/) which permits commercial use, including reproduction, adaptation, and distribution of the article provided the original author and source are credited.

Published by United Scientific Group

## Abstract

This study illustrates the efficient and effective design of BGaN-based ultraviolet light-emitting diodes which includes a staircase barrier and V-shaped well-embedded in order to achieve higher working potential. The results prove the improved wall-plug efficiency (WPE) and external quantum efficiency (EQE) values. The V-shaped structure increases the confinement of electrons in the quantum barriers and also improves the injection of holes in the device's active region. The structure also facilitates the uniform distribution and migration of the holes in the active region. In addition to this, it also enhances the radiative recombination rates significantly resulting in the quantum efficiency of the device.

## Keywords

External quantum efficiency, Light emitting diode, Wall-plug efficiency

## Introduction

In the present scenario, light-emitting diodes (LEDs) based on BGaN have the highest priority in the commercial market based on the high efficiency in the performance and versatility to adapt to any type of applications ranging from biomedical-based disinfection and sterilization, purification, and gas sensing. The DUV (Deep-ultraviolet)-LEDs are the best alternative for UV light sources based using mercury as the size of LED is a compact and adjustable wavelength, environmentally friendly, and non-toxic [1]. The important parameters that help in the wide-range usage of BGaN-based DUV-LED are improved WPE and EQE. In order to improve the WPE and EQE the carrier distribution in active regions should be uniform and carrier injection efficiency should be maximized. It is also evident that the factors which are responsible for poor values of CIE are insufficient hole injection and electron leakage. In the literature, many epitaxial structures are proposed so as to increase the CIE. UV-LED using p-electron blocking layer-free strip-in-used to suppress the electron overflow and increase the hole injection using barrier structure. The thin delta layers are inserted which will help in accelerating holes towards higher potential barriers which will block the electrons moving from the recombination region by energy band modulation [2, 3].

The rate of radiative recombination of DUV-LEDs can be affected and reduced in the active region due to the non-uniform distribution of carrier. The non-uniform carrier distribution in the recombination region is the result of differences in the effective mass and mobility, also the result of concentration difference between holes and electrons in GaN materials [4, 5]. The maximum leakage of the electrons in the active region towards the p-type will reduce the

injection of holes. The holes move in multi-quantum wells [6]. Hence the holes in the traditional LED will be available in the well region which is close to the p-side doped layer, they have a significant effect on the reduction in the volume of the non-uniform distribution of the carrier and will have an effect on the quantum wells of the active region and contributes to internal quantum efficiency (IQE) [5, 6]. Using BGaN in DUV-LEDs in the active region with V-shaped structures will result in an increase in the doping hole injection layer which is induced polarization that will enhance the CIE and improves the homogeneous distribution of the carrier that are present in the recombination region. The V-shaped structure increases the composition of quantum barriers in the active region and confinement capacity of electrons and which intern improves the efficiency of hole injection. The experimental and simulation results prove that usage of BGaN in DUV-LEDs with the V-shaped structure in the active region is efficient [7-9].

# Experimentation

## Device structure

The structure includes AlN buffer layer along with a (5 x $10^{18}$ $cm^{-3}$) Si-doped 2-µm-thick $Al_{0.48}Ga_{0.52}N$ layer (Figure 1). The active region includes four periods of 2.5-nm-thickness BGaN which is not doped. $Al_{0.60}Ga_{0.40}N$ Si-doped of 10-nm and (3 x $10^{18}$ $cm^{-3}$) which as quantum barriers and with a thickness of 3-nm with last quantum barrier is included in the structure in continuation to the device structure (Table 1). Further, a 20-nm-thick magnesium (Mg) doped electron blocking layer (1 x $10^{18}$ $cm^{-3}$) which includes four pairs of $Al_{0.45}Ga_{0.55}N$ (10 nm)/ BGaN (2.5 nm) superlattice layers. The device structure includes a thickness of 55-nm (3 x $10^{18}$ $cm^{-3}$) Mg which is doped and $Al_{0.75}Ga_{0.25}N/Al_{0.55}Ga_{0.45}N$ which is a polarization-initiated doping hole injection layer. The transition layer of Mg-doped (3 x $10^{19}$ $cm^{-3}$). 10-nm-thick the uppermost layer is the ultrathin (4 nm) and (2 x $10^{20}$ $cm^{-3}$) Mg-doped with GaN ohmic contact layer.

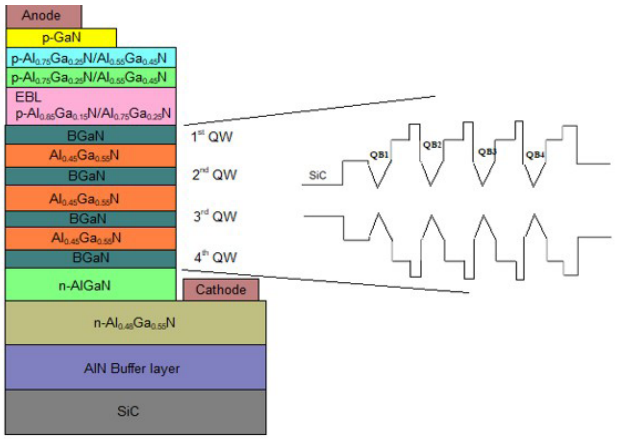


**Figure 1:** Schematic representation of AlGaN/BGaN MQW LED.

**Table 1:** Device parameters with dimensions.

| Parameter | Dimensions |
|---|---|
| GaN cap layer | 100 nm |
| p-GaN | 4 nm |
| EBL | 20 nm |
| BGaN well | 2.5 nm |
| AlGaN barrier | 10 nm |
| p-AlGaN | 65 nm (10 + 55) |
| n-doping | 3 x $10^{18}$ $cm^{-3}$ |
| p-type doping | 5 x $10^{19}$ $cm^{-3}$ |

# Results and Discussion

Figure 2 shows the IQE of the LED structure. IQE increases with injection current when the injection current is low. It then reaches saturation and exhibits efficiency drop. Figure 3 depicts the luminance power relative to the anode voltage. The anode voltage causes a rise in the observed luminous power. According to the simulation results in figure 4 and figure 5, the maximum EQE is 8.47% and the recorded WPE is 9.01% for the proposed device structure.

The simulation results prove that the EQE efficiency will have more drop in the efficiency ($EQE_{efficiency\ droop}$ = 1 – $EQE_{@300mA}/EQE_{max}$) of LED device structure is 27%, respectively. The drop in the efficiency of the device is about one-half of the traditional structure that is available [10, 11]. As a result of improvement in the injection of holes efficiency and homogeneous distribution of the carrier in the device. When

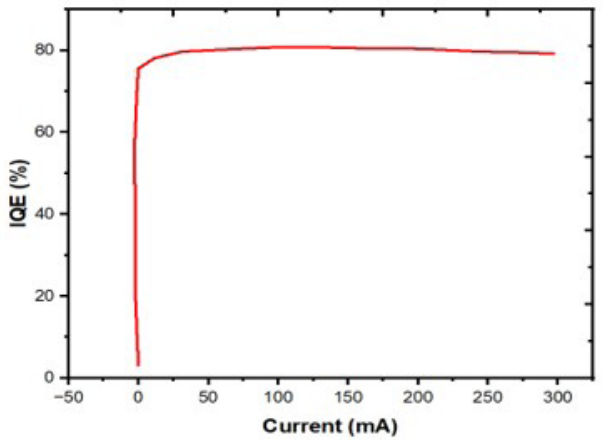


**Figure 2:** Current vs IQE of the proposed LED structure.

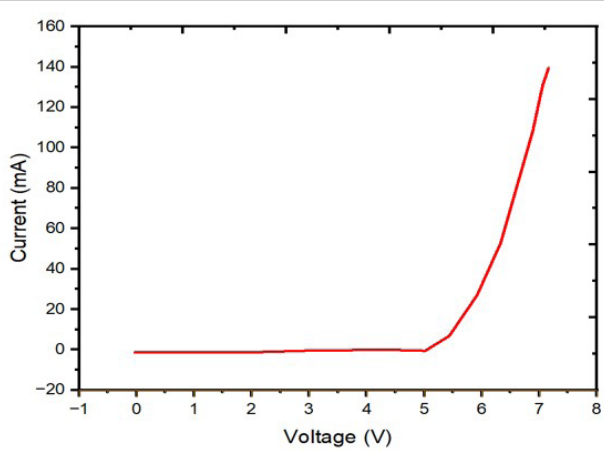


**Figure 3:** Current vs Voltage of the proposed LED structure.

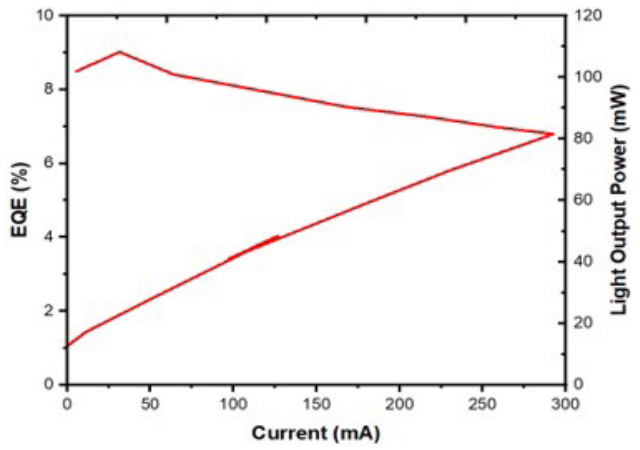


**Figure 4:** Current vs EQE of the proposed LED structure.

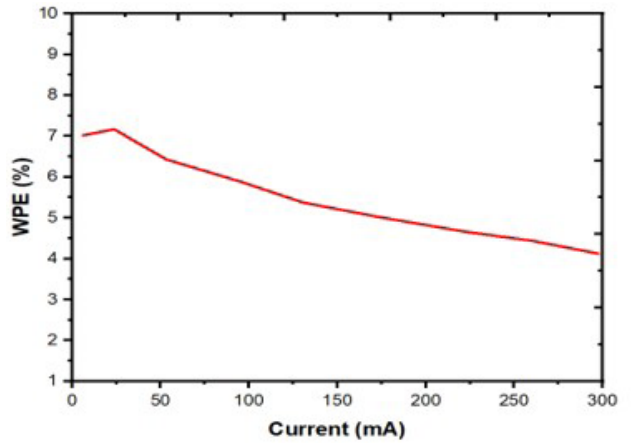


**Figure 5:** Current vs WPE of the proposed LED structure.

the injection of holes efficiency is higher, the carrier will be distributed uniformly in the V-shape multi-quantum wells, increasing the quantum well efficiency number. All these phenomena lead to results in an increase in the recombination region volume of the device which will alleviate the efficiency droop.

## Conclusion

It can be concluded higher efficiency of AlGaN/BGaN DUV-LED can be attained with a combination of staircase barrier and with V-shaped quantum well structure. The simulation results prove that the proposed device structure has 9.01% and 8.47% WPE and EQE, respectively.

## Acknowledgments

None.

## Conflict of Interest

None.

### References

1. Cao Y, Lv Q, Yang T, Mi T, Wang X, et al. 2023. Improved hole injection and carrier distribution in AlGaN deep-ultraviolet light-emitting diodes with bidirectional-staircase-barrier structure. *J Lumin* 257: 119699. https://doi.org/10.1016/j.jlumin.2023.119699
2. Manikandan M. 2022. Design and simulation of AlGaN/GaN multiple quantum well structures for high efficient LED devices. School of Engineering, Presidency University. (Doctoral Dissertation)
3. Prajoon P. 2021. Design and analysis of quantum efficiency enhancement techniques in InGaN/GaN multiple quantum well LEDs. School of Engineering, Presidency University. (Doctoral Dissertation)
4. Zhang J, Zhuo XJ, Li DW, Yu L, Li K, et al. 2014. Effect of Mg doping in GaN interlayer on the performance of green light-emitting diodes. *IEEE Photonics Technol Lett* 27(2): 117-120. https://doi.org/10.1109/LPT.2014.2362939
5. Yorozu T, Hirano M, Oka K, Tagawa Y. 1987. Electron spectroscopy studies on magneto-optical media and plastic substrate interface. *IEEE Trans J Magn Jap* 2(8): 740-741. https://doi.org/10.1109/TJMJ.1987.4549593
6. Young M. 2002. Technical Writer's Handbook: Writing with Style and Clarity. Sausalito.
7. Manikandan M, Nirmal D, Ajayan J, Arivazhagan L, Prajoon P, et al. 2020. Numerical investigation of traps and optical response in III-V nitride quantum LED. *Opt Quantum Electron* 52: 1-9. https://doi.org/10.1007/s11082-020-02633-w
8. Shi H, Gu H, Li J, Yang X, Zhang J, et al. 2019. Performance improvements of AlGaN-based deep-ultraviolet light-emitting diodes with specifically designed irregular sawtooth hole and electron blocking layers. *Opt Commun* 441: 149-154. https://doi.org/10.1016/j.optcom.2019.02.054
9. Manikandan M, Nirmal D, Ajayan J, Arivazhagan L, Prajoon P, et al. 2022. Physics based modeling of AlGaN/BGaN quantum well based ultraviolet light emitting diodes. *Opt Quant Electron* 54: 168. https://doi.org/10.1007/s11082-022-03552-8
10. Dhivyasri G, Nirmal D, Manikandan M, Gokiladeepa G, Ajayan J, et al. 2022. Simulation and comparison of AlGaN LEDs with boron doped GaN well using assorted aluminium concentration. In IEEE International Conference on Nanoelectronics, Nanophotonics, Nanomaterials, Nanobioscience & Nanotechnology, Kottayam, Kerala, India.
11. Manikandan M, Nirmal D, Dhivyasri G, Arivahagan L, Ajayan J, et al. 2021. Simulation analysis of UV–A band LEDs with BGaN single quantum well using SiC substrate for medical applications. In 3rd International Conference on Signal Processing and Communication, Coimbatore, Tamil Nadu, India.